# Primelite Manufacturing Corp.

407 S Main St, Freeport, NY 11520
Phone: (516) 868-4411 | Fax: (516) 868-4609
sales@primelite-mfg.com | www.primelite-mfg.com


**PROUDLY MADE IN THE USA SINCE 1962!**
**"SPECIALTIES ARE OUR SPECIALTY!"**

**Job Info**

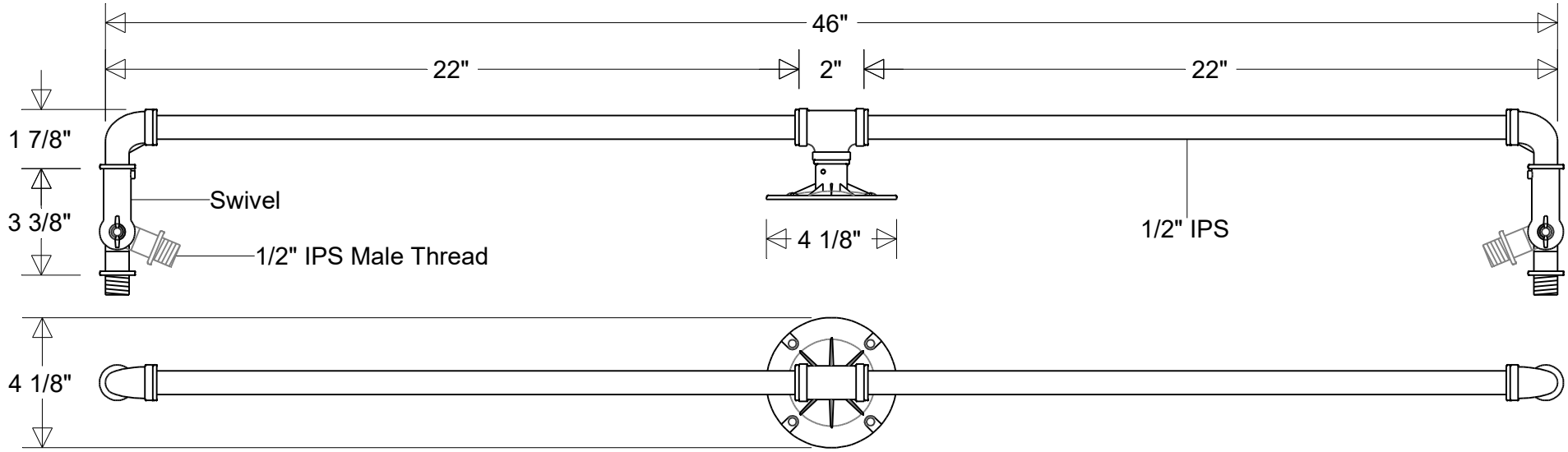


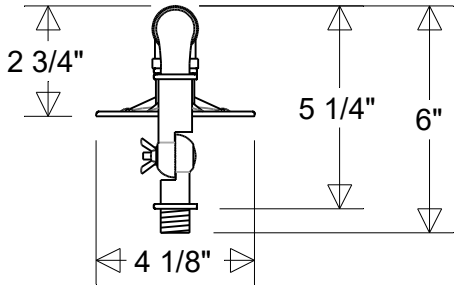


## #855-ESW-P2

46" L | 4 1/8" W | 5 1/4" Drop | 1/2" IPS

Compatible with "A" series shades

| Lamp: N/A | Finish: | Drawn: | Scale: | Approvals |
|---|---|---|---|---|
| | 29 Oven Baked Powder Coated Paints | CB 05/2026 | 1/5 | |
| | Material: Aluminum | Note: All dimensions are nominal. Actual dimensions may vary. | | |