Primelite Manufacturing Corp.

407 S Main St, Freeport, NY 11520
Phone: (516) 868-4411 | Fax: (516) 868-4609
sales@primelite-mfg.com | www.primelite-mfg.com

PROUDLY MADE IN THE USA SINCE 1962!
"SPECIALTIES ARE OUR SPECIALTY!"

Job Info

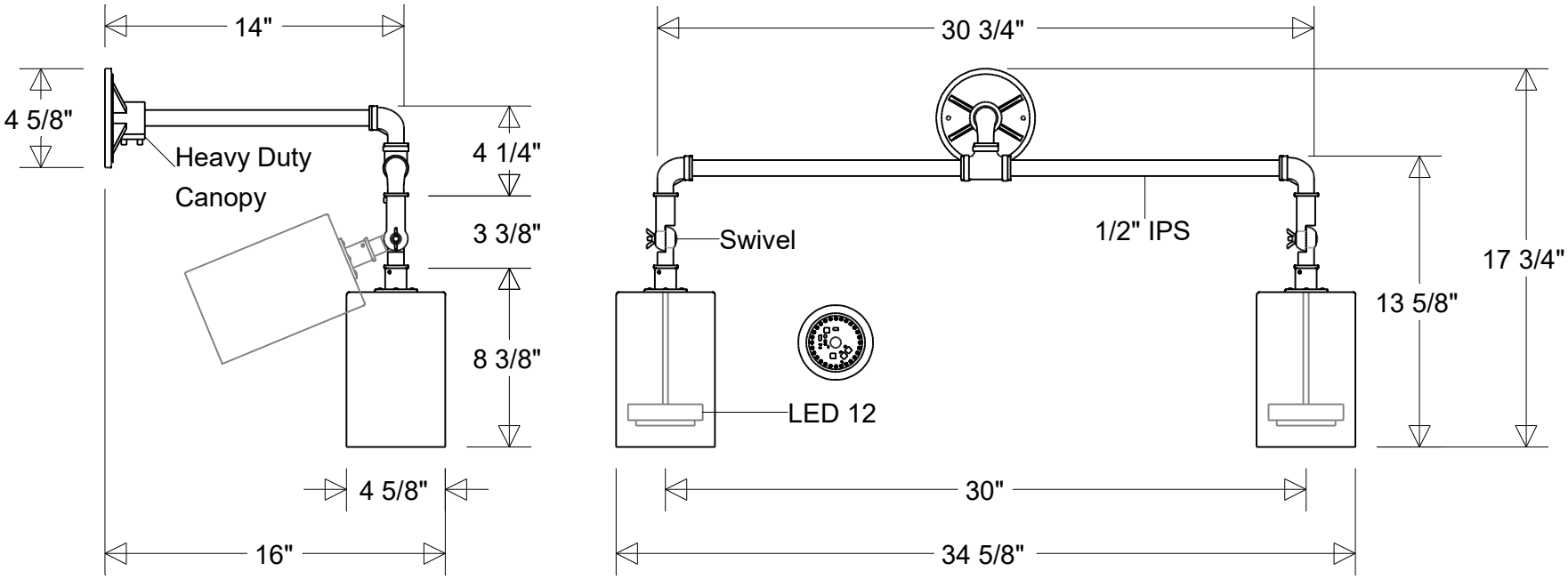

#58/858-14E-30W ESW HDC LED 12

4 5/8" Dia | 16" Ext | 34 5/8" W | 17 3/4" H

Shade: #58A LED 12 | Arm: #858-14E-30W ESW HDC

Lamp: 12 W LED	Finish:	Drawn:	Scale:	Approvals
CCT: 3K or 4K	29 Oven Baked	CB	1/8	
75W Inc Equivalent	Powder Coated Paints	09/2026		
80 CRI	Material:	Note:		
120V	Aluminum	All dimensions are nominal.		
Electronic Dimming		Actual dimensions may vary.		