Primelite Manufacturing Corp.

407 S Main St, Freeport, NY 11520
Phone: (516) 868-4411 | Fax: (516) 868-4609
sales@primelite-mfg.com | www.primelite-mfg.com

PROUDLY MADE IN THE USA SINCE 1962!
"SPECIALTIES ARE OUR SPECIALTY!"

Job Info

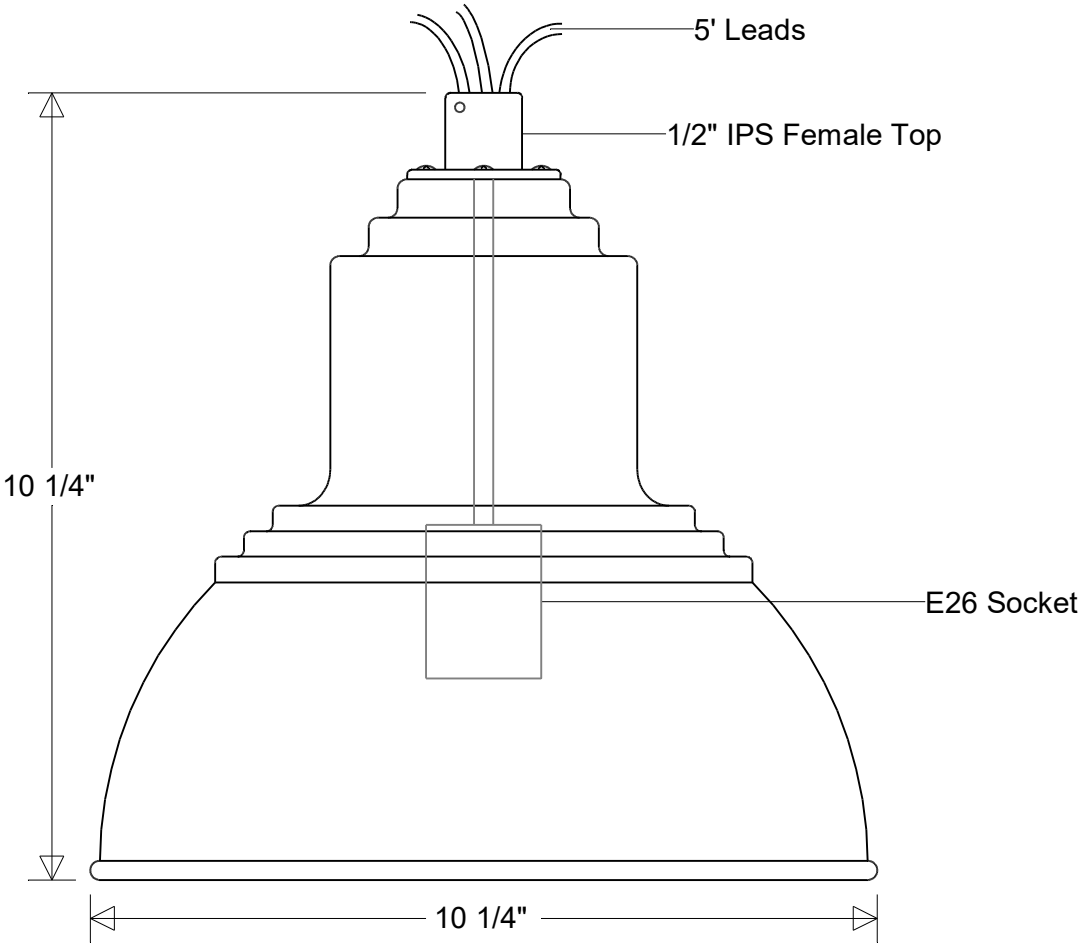

#40/10A

10 1/4" Dia | 10 1/4" H

Fits 1/2" IPS Threaded Stems and Arms

Lamp: E26 Socket	Finish:	Drawn:	Scale:	Approvals
Max Wattage: 60 W	29 Oven Baked	CB	1 / 2.5	
Number of Sockets: 1	Powder Coated Paints	05/2026		
120 V	**Material:**	**Note:**		
	Aluminum	All dimensions are nominal.		
		Actual dimensions may vary.		