Primelite Manufacturing Corp.

407 S Main St, Freeport, NY 11520
Phone: (516) 868-4411 | Fax: (516) 868-4609
sales@primelite-mfg.com | www.primelite-mfg.com

PROUDLY MADE IN THE USA SINCE 1962!
"SPECIALTIES ARE OUR SPECIALTY!"

Job Info

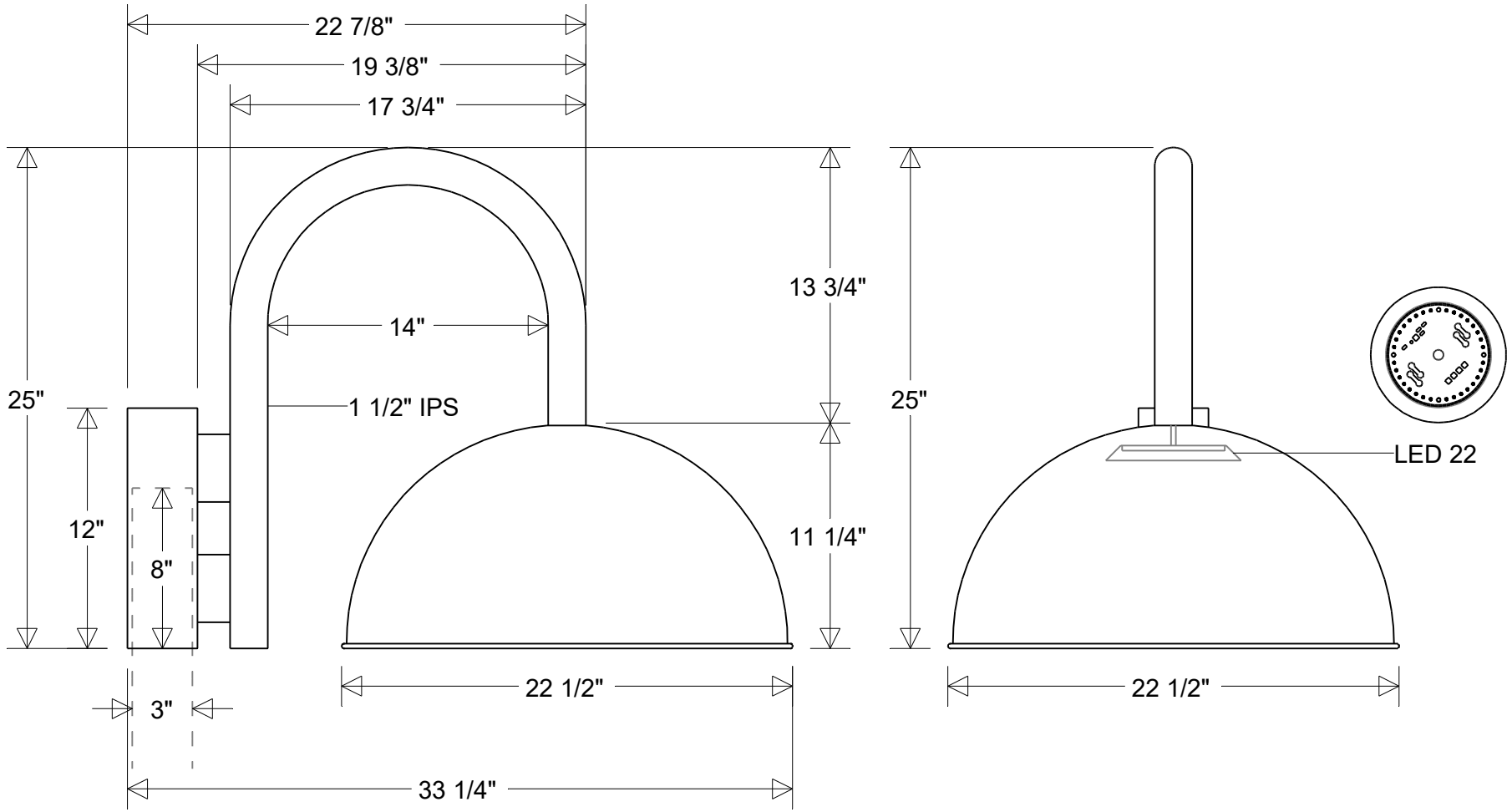

#39/23-1963 LED 22

22 1/2" Dia | 33 1/4" Ext | 25" H | 3" Post Fitter

Shade: #39/23D LED 22 | Arm: #1963

Lamp: 22 W LED	Finish:	Drawn:	Scale:	Approvals
CCT: 3K or 4K	29 Oven Baked	CB	1/8	
125W Inc Equivalent	Powder Coated Paints	05/2026		
80 CRI	Material:	Note:		
120V	Aluminum	All dimensions are nominal.		
Electronic Dimming		Actual dimensions may vary.		