Primelite Manufacturing Corp

407 S Main St, Freeport, NY 11520

Phone: 516-868-4411 | Fax: 516-868-4609

sales@primelite-mfg.com | www.primelite-mfg.com

PART #	LAMP	VOLTAGE	COLOR
#23/7-1873	E26 Socket	120 V	Powder Coated Paint
JOB NAME			TYPE: Post Light

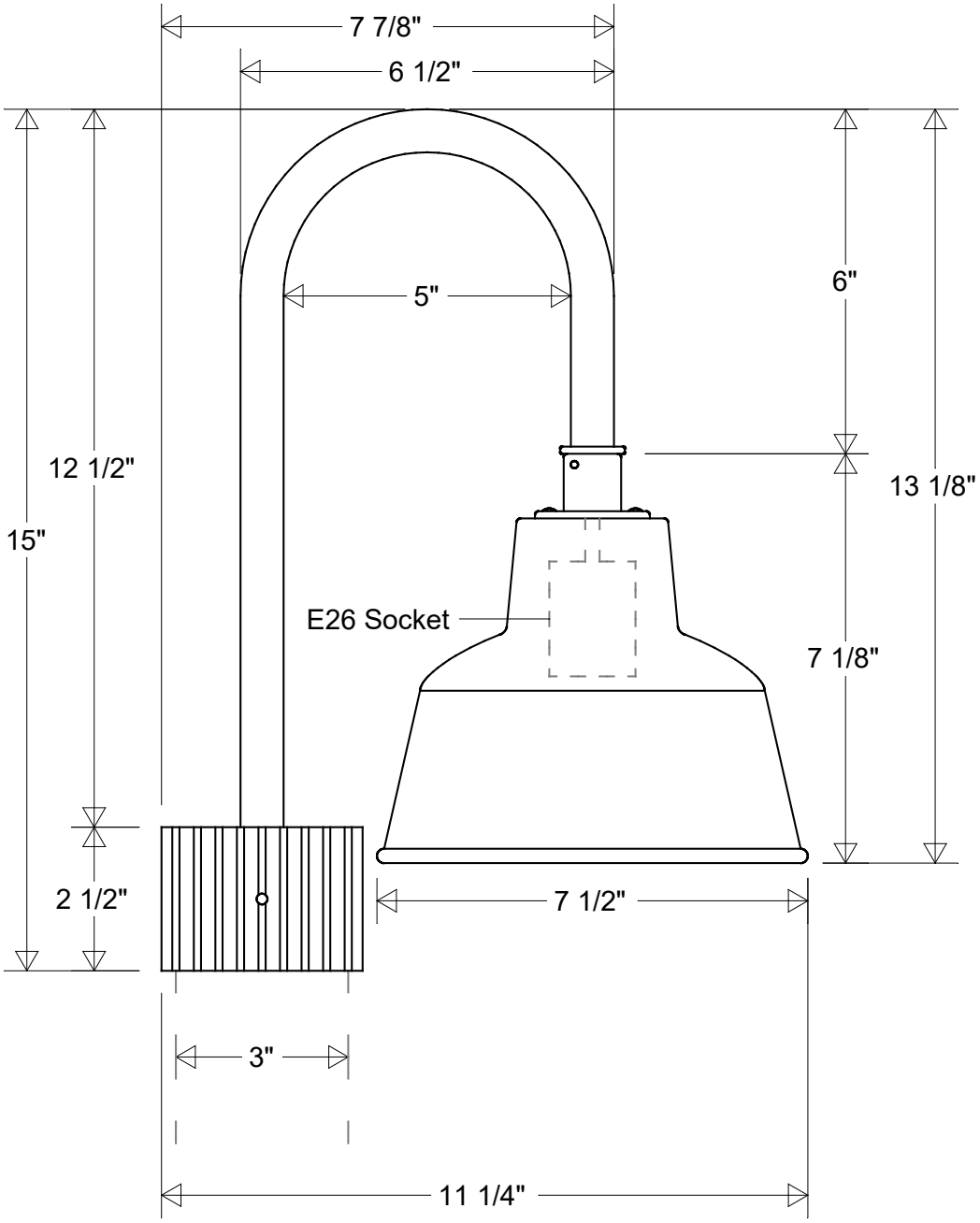

		Initials	Date							
Lamp: E26 Socket Max Wattage: 60 W	Drawn	CB	04/2022	**Post Light #23/7-1873**						
	Checked			7 1/2" Dia | 11 1/4" Ext | 15" H			**Revisions**			
	ENG Appr.			Fits 3" OD Round Post			**Zone**	**Rev**	**Description**	**Date**	**Appr**
Construction: Aluminum	MFR Appr.			Size	Drawing No.	Rev					
	QA			**A**	**0001**	**A**					
Unless Otherwise Specified: Dimensions in Inches	**Weight:**			Scale	CAD File	Sheet **1 of 1**					