Primelite Manufacturing Corp.

407 S Main St, Freeport, NY 11520
Phone: (516) 868-4411 | Fax: (516) 868-4609
sales@primelite-mfg.com | www.primelite-mfg.com

PROUDLY MADE IN THE USA SINCE 1962!
"SPECIALTIES ARE OUR SPECIALTY!"

Job Info

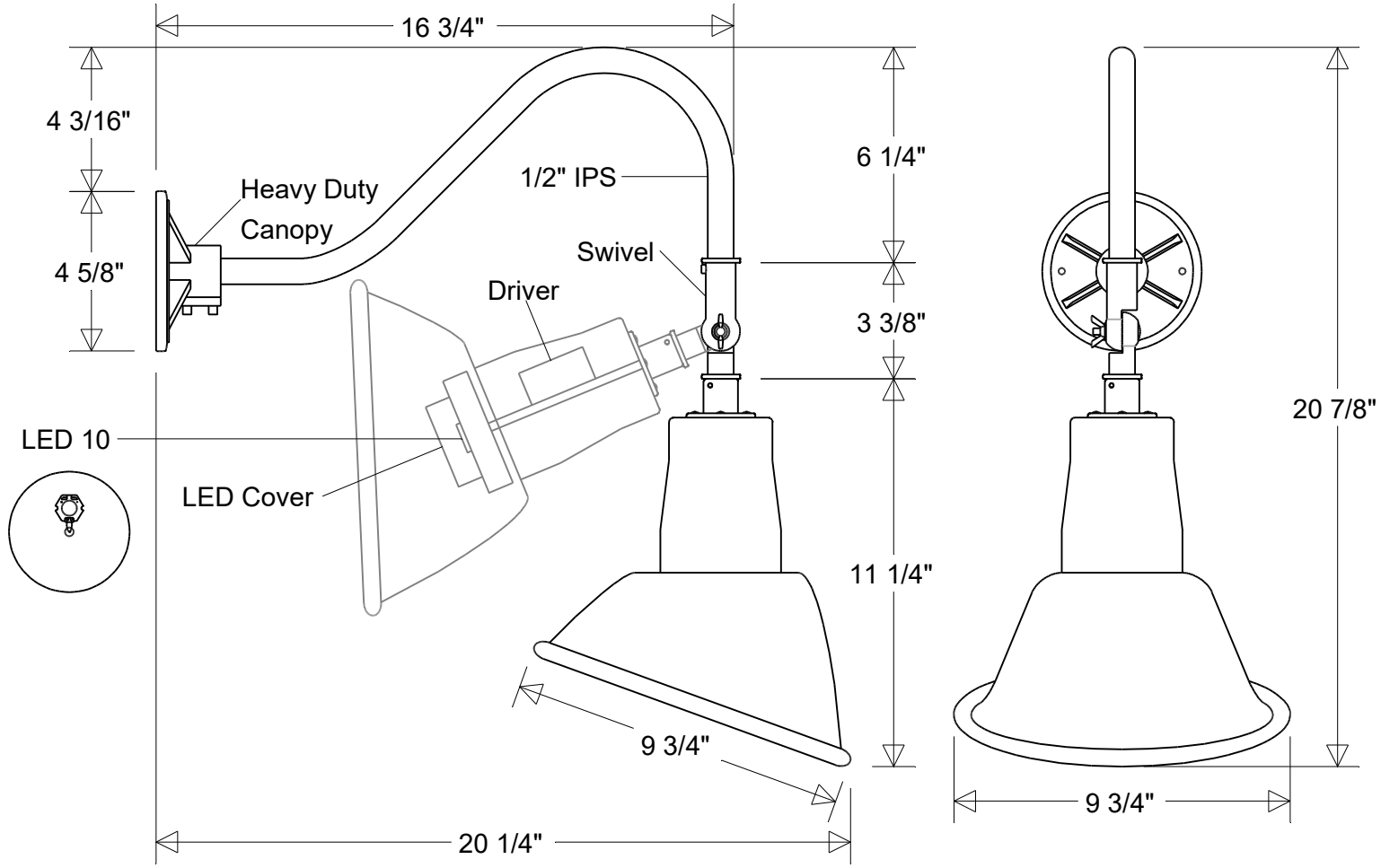

#20/859 ESW HDC LED 10 Dimm

9 3/4" Dia | 20 1/4" Ext | 20 7/8" H

Shade: #20A LED 10 Dimm | Arm: #859 ESW HDC

Lamp: 10 W LED	Finish:	Drawn:	Scale:	Approvals
CCT: 3K or 4K | Others	29 Oven Baked	CB	1/5	
100W Inc Equivalent	Powder Coated Paints	07/2026		
80 CRI	Material:	Note:		
120-277 V	Aluminum	All dimensions are nominal.		
0-10 V Dimming		Actual dimensions may vary.		