Primelite Manufacturing Corp.

407 S Main St, Freeport, NY 11520
Phone: (516) 868-4411 | Fax: (516) 868-4609
sales@primelite-mfg.com | www.primelite-mfg.com

PROUDLY MADE IN THE USA SINCE 1962!
"SPECIALTIES ARE OUR SPECIALTY!"

Job Info

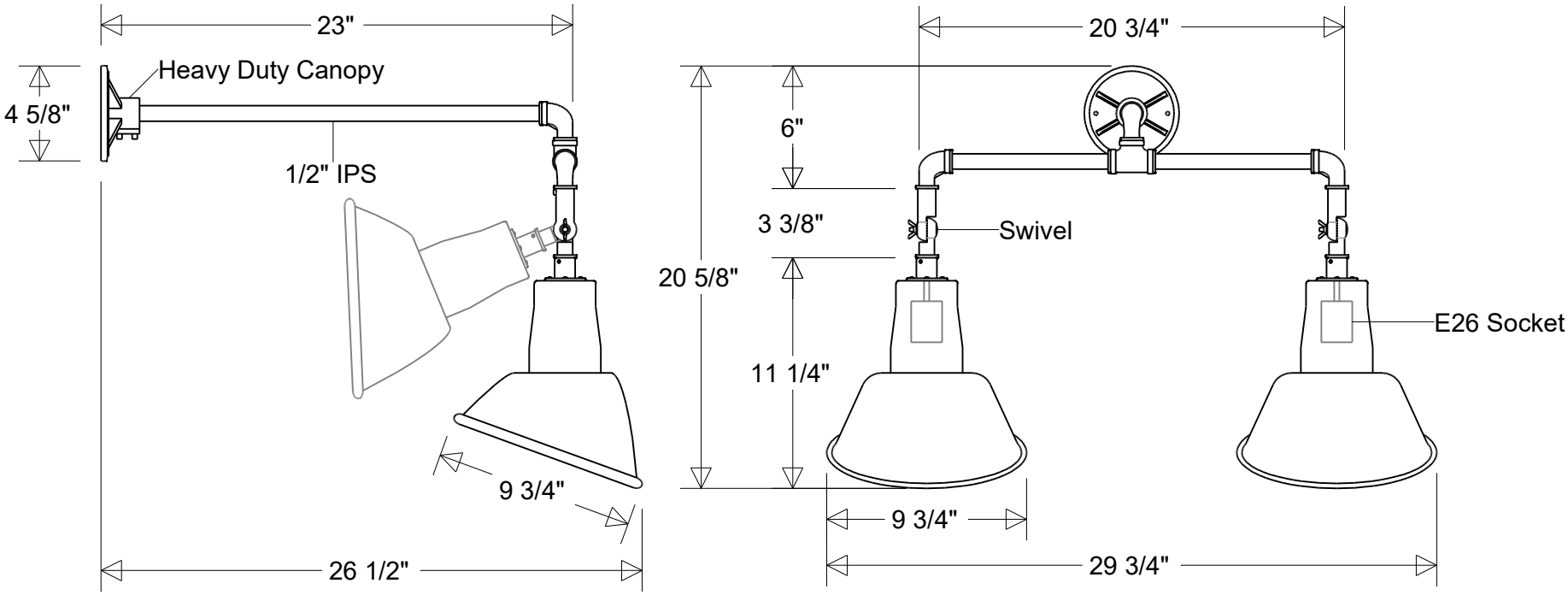

#20/858 ESW HDC

9 3/4" Dia | 26 1/2" Ext | 20 5/8" H | 29 3/4" W

Shade: #20A | Arm: #858 ESW HDC

Lamp: E26 Socket	Finish:	Drawn:	Scale:	Approvals
Max Wattage: 200 W each	29 Oven Baked	CB	1/8	
Number of Sockets: 2	Powder Coated Paints	08/2026		
120 V	**Material:**	**Note:**		
	Aluminum	All dimensions are nominal.		
		Actual dimensions may vary.		