Primelite Manufacturing Corp.

407 S Main St, Freeport, NY 11520
Phone: (516) 868-4411 | Fax: (516) 868-4609
sales@primelite-mfg.com | www.primelite-mfg.com

PROUDLY MADE IN THE USA SINCE 1962!
"SPECIALTIES ARE OUR SPECIALTY!"

Job Info

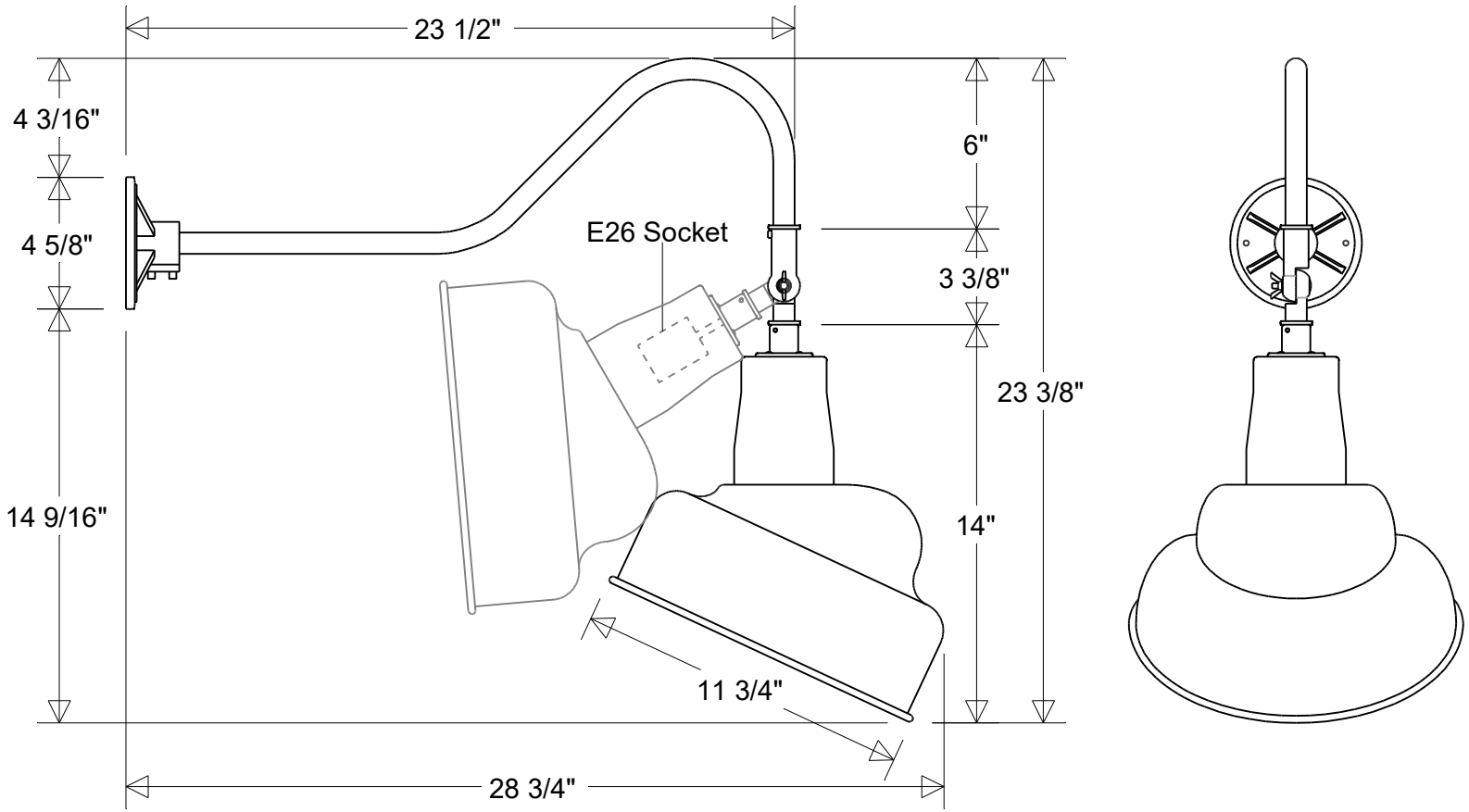

#19/850 ESW HDC

11 3/4" Dia | 23 3/8" H | 28 3/4" Ext
Shade: #19A | Arm: #850 ESW HDC

Lamp: E26 Socket	Finish:	Drawn:	Scale:	Approvals
Max Wattage: 200 W	29 Oven Baked	CB	1 / 6.25	
Number of Sockets: 1	Powder Coated Paints	08/2025		
Voltage:	**Material:**	**Note:**		
120 V	Aluminum	All dimensions are nominal. Actual dimensions may vary.		